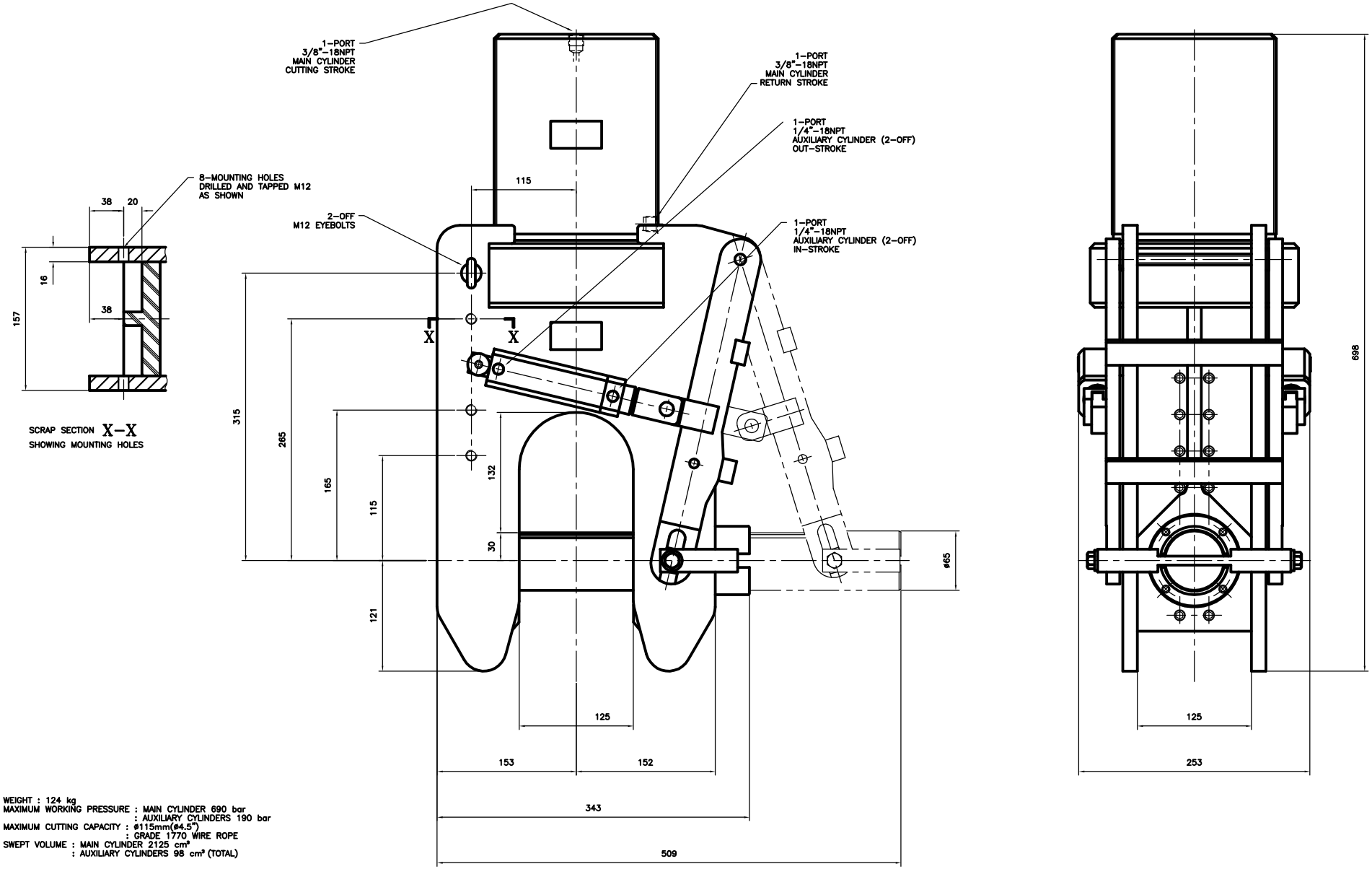

WEIGHT : 124 kg
MAXIMUM WORKING PRESSURE : MAIN CYLINDER 690 bar
: AUXILIARY CYLINDERS 190 bar
MAXIMUM CUTTING CAPACITY : ø115mm(ø4.5")
: GRADE 1770 WIRE ROPE
SWEPT VOLUME : MAIN CYLINDER 2125 cm³
: AUXILIARY CYLINDERS 98 cm³ (TOTAL)

ALLSPEEDS LTD.
CLAYTON-LE-MOORS
ACCRINGTON
LANCS. BB5 5LP
TEL: 01254 615169
FAX: 01254 615169

AS SHEET 1

DO NOT SCALE

No.	MOD	DATE

MATL. SEE SHEET 1
GRADE --
SPEC. --
H/T. --

EXCEPT WHEN STATED
DIMS ARE mm
TOLS ARE ±1mm

RCV 115 WIRE ROPE CUTTER GENERAL ASSEMBLY

DRAWN PAUL FENTON | APPROVED | DATE 5-5-94

ORIGINAL SCALE 1:2 | SHEET 2 OF 2 | DRG.No. 980 290