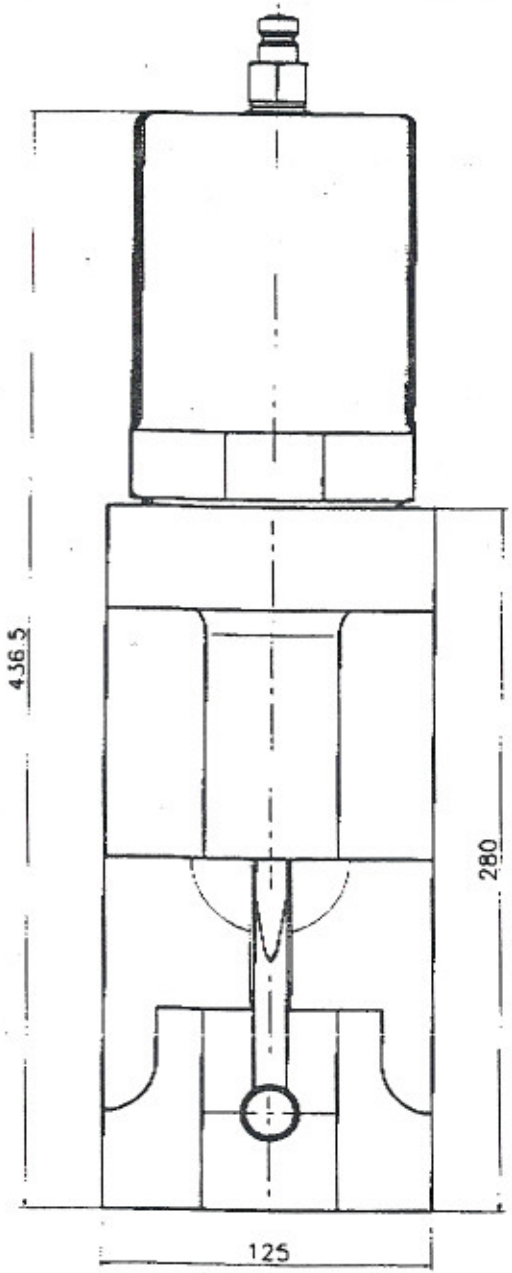

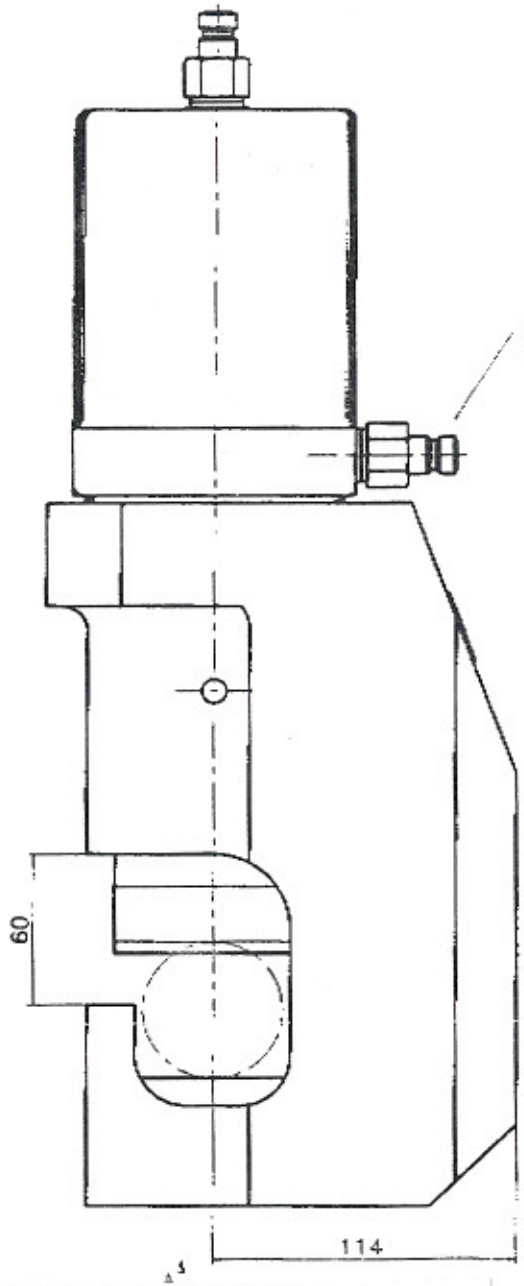

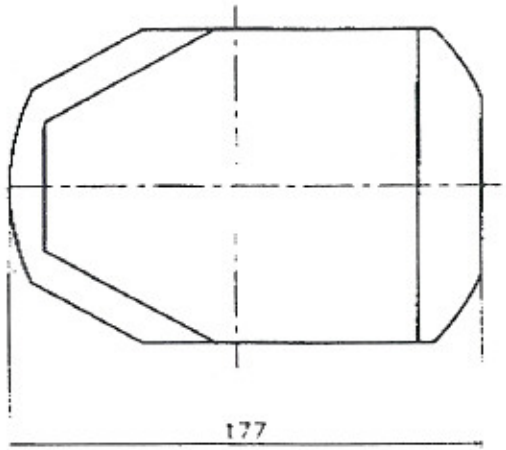

VIEW ON ARROW A

MAXIMUM WORKING PRESSURE: 700 bar

VARIATORS LTD.

61 Advance Rd., Unit 7
Toronto, Ontario M8Z 2S6
TEL: (416) **234-8671** FAX: (416) **237-9279**

A1

WCO540Z CABLE CUTTER SECTIONAL ASSEMBLY

DRAWN Mark Lowe APPROVED RPS DATE 11-May-99

SCALE 1:1 SHEET 2 of 2 DWG.No. **980-210**